email: sales@vantageproducts.co.uk
phone: 01327 313130

Inset Basin - Flat Flange VIN230RW

Product Description:

Wash hand basin mainly for welding into a worktop. Manufactured from 304BA (1.4301) grade stainless steel. Material thickness is 1.2mm. Prepared for 32mm waste outlet and overflow hole, flat rim.

Can be supplied with or without overflow

Technical Specification:

Outer Dimensions (mm)	265 dia
Bowl Diameter (mm)	230 tapered to 155
Bowl Depth (mm)	110
Material	304 (1.4301) BA stainless steel
Material Thickness (mm)	1.5
Net Weight (kg)	TBC
Fixings	M4 40mm stainless steel fixing studs & fixings
Finish	Polished

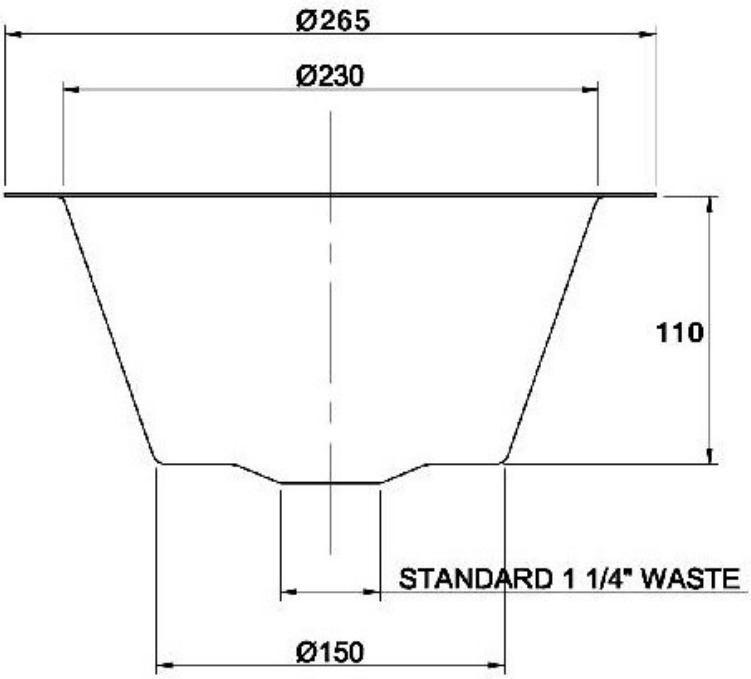

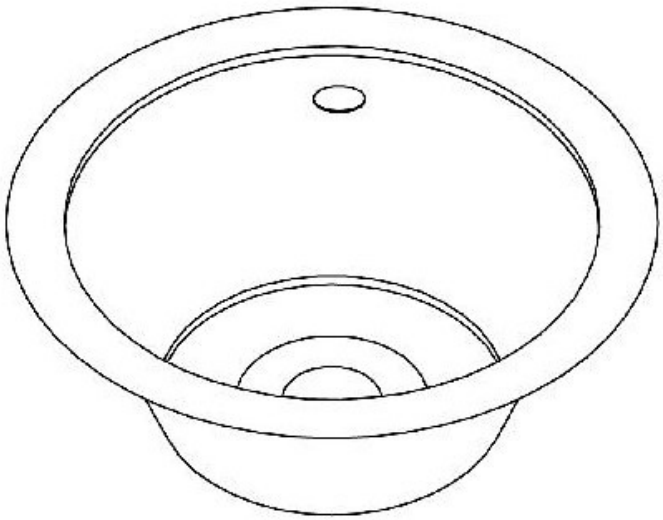

Copyright © 2020 Vantage Products Ltd - All rights reserved. The information on this document is copyright of Vantage Products Ltd unless otherwise stated and commercial use of this material may only be made with prior written permission of Vantage Products. All information included is correct at time of print. Users must satisfy themselves as the the suitability and safety of the products for their purposes. Dimensions shown in mm unless otherwise stated. Unless otherwise stated, all products carry a warranty of twelve (12) months against manufacturing defect or workmanship on parts, with no inclusion for labour or site attendance. In accordance with our policy of continued development we reserve the right to alter design and specifications without prior notification.

Document created 01.01.2020 Last updated 01.06.2022